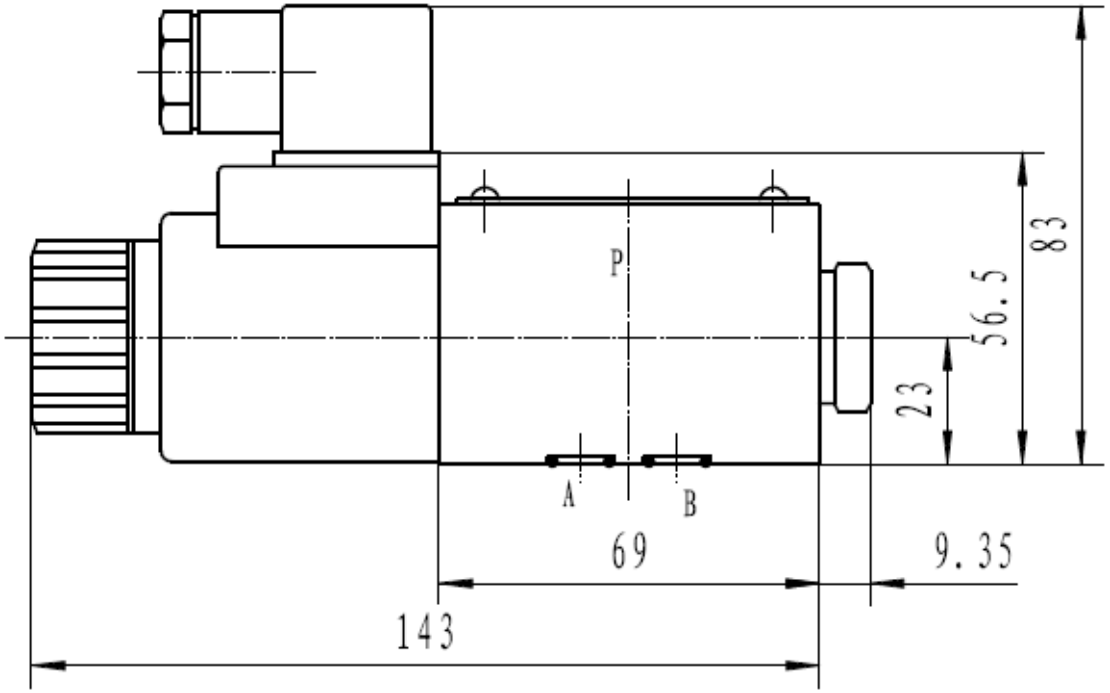
P
A
B
83
56.5
23
69
9.35
143

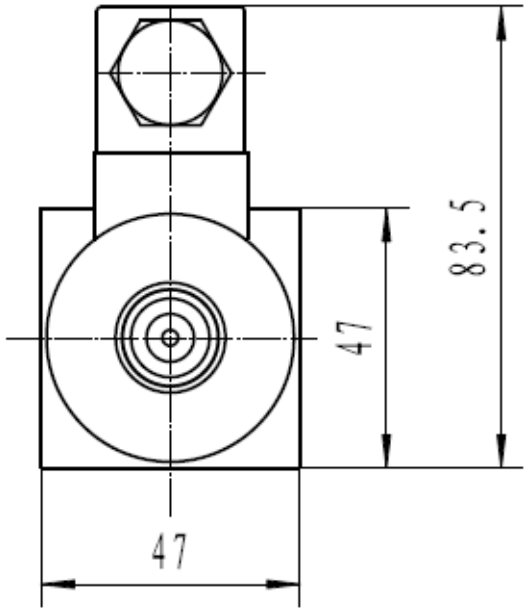
83.5
47
47

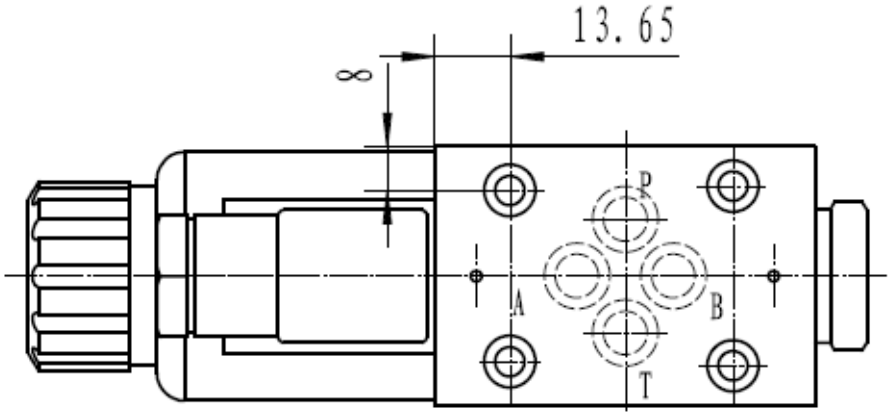
13.65
8
P
A
B
T