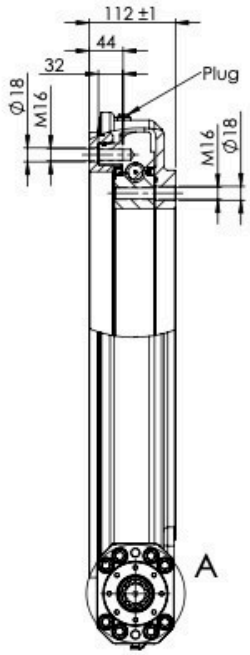

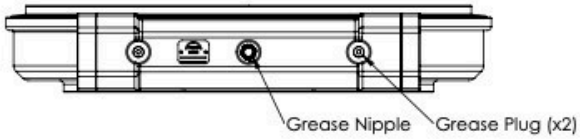

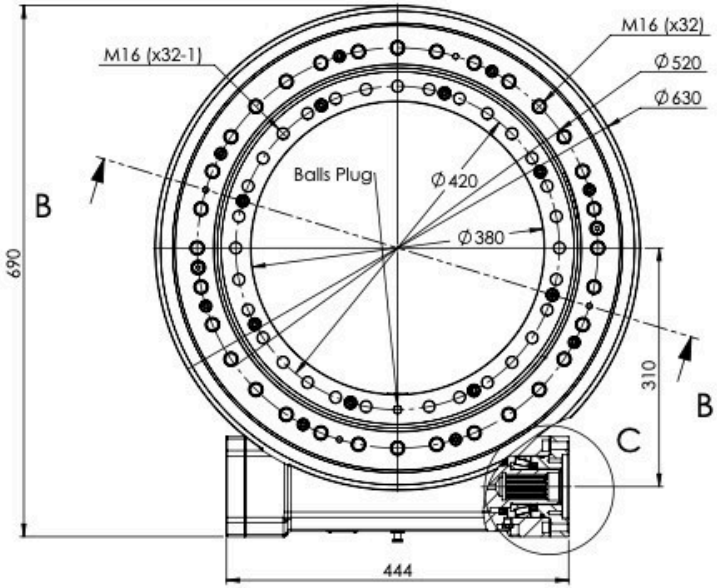

Drive Performance Data	
Gear ratio (i):	94:1
Efficiency (%):	50%
Self-locking gear:	Yes (see installation manual)
Backlash Clearance (°):	<0,17°
Maximum Torque (kNm):	30 kNm (10% each minute)
Nominal Torque (kNm):	25 kNm (5% of 10000 hours, 60 starts per hour)
Maximum reverse Torque (kNm):	2,5 kNm
Holding Torque (kNm):	50 kNm
Tilting Moment (kNm):	203 kNm
Radial Static Load (kN):	675 kN
Axial Static Load (kN):	1808 kN
Radial Dinamic Load (kN):	251 kN
Axial Dinamic Load (kN):	293 kN
Treshold start torque (no load condition) (N):	<10 Nm at 20°C
Maximum output speed (RPM):	1
Lubrication condition:	Ready to work std. grease -20 to 160°C type 2 calcium sulfonate
Operating temperature (°C):	-20 to 70°C
Ingress protection (IP):	IP66

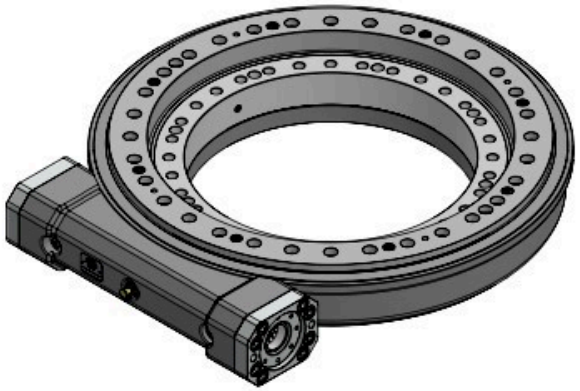

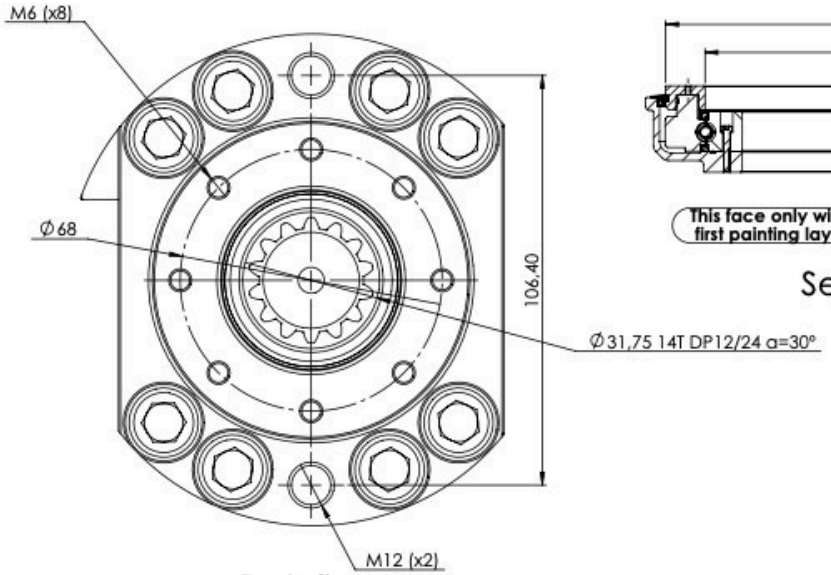

Detail A

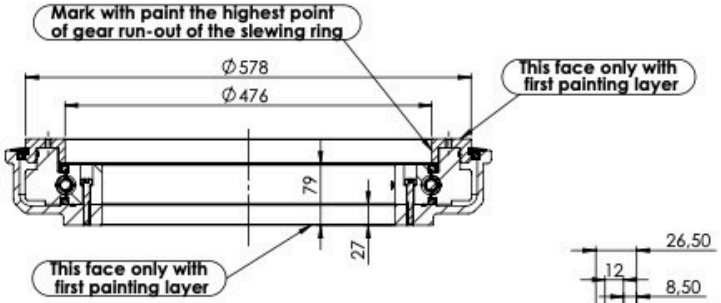

Section B-B

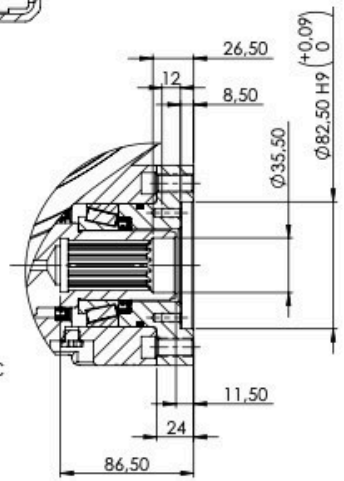

Detail C

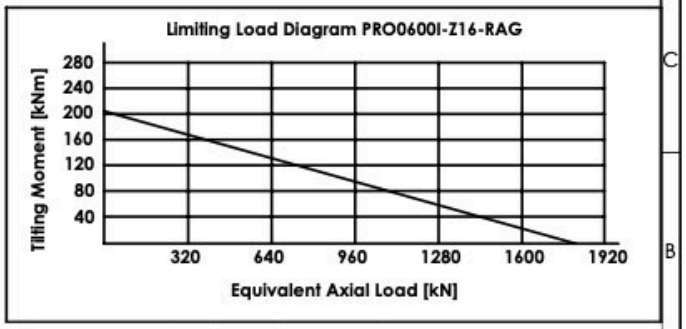

HYDRAULIEK 24
COMPONENTEN | SYSTEMEN | SLANGEN